Project data

date	2/23/2026

Basic data

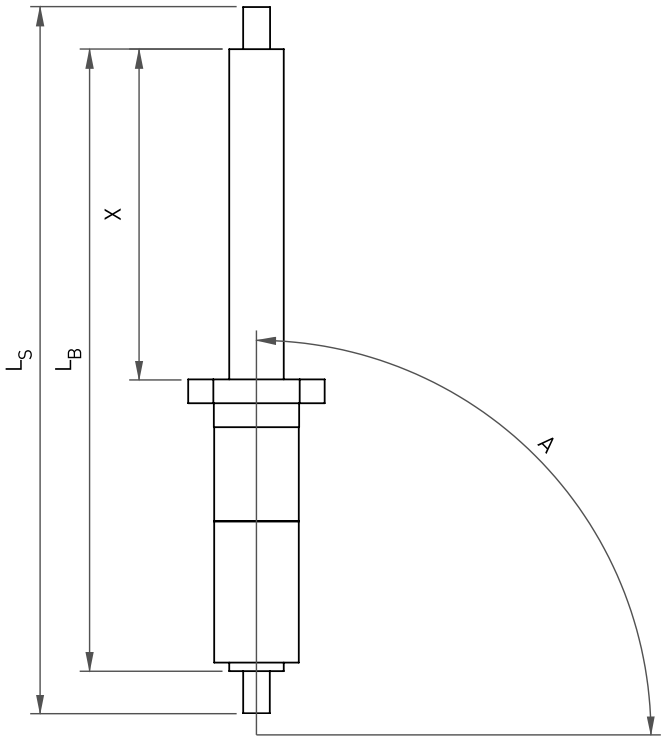

Nut type	double nut
Max. Travel distance X [mm]	3,000
Angle A [°]	90
Storage	fixed - floating

Moving mass		
		[kg]
1	Mass 1	76

Driving profile

Start position [mm]	0

	travel distance [mm]	v [m/s]	a [m/s²]	t_{pos} [s]	t_a [s]	t_{Pause} [s]	Effective mass	Active forces	Description of the single journey
Drive 1	3,000	0.3	1	10.3	0.3		[m1]	-	
Drive 2	-3,000	-0.3	-1	10.3	0.3		[m1]	-	

v = speed · a = acceleration · t_{pos} = Positioning time · t_a = Acceleration time · t_{Pause} = Break · Effective mass = Moving masses on this journey · Active forces = External forces acting on this journey

Total cycle time [s]	20.6

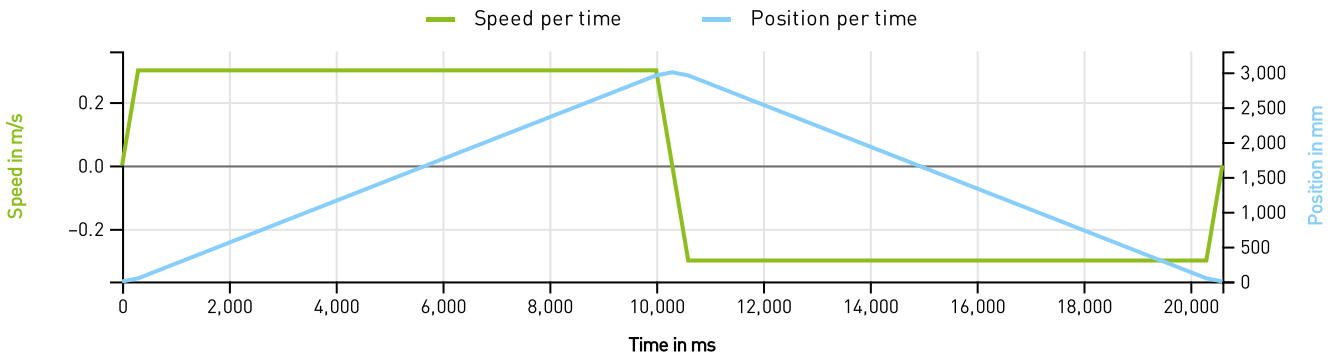

Operating data					
Number of cycles/hour	30	Number of hours/day	8	Number of days/year	220

Selected ballscrew: **R80-20K4-DDB-N-3259-3464-0.023**

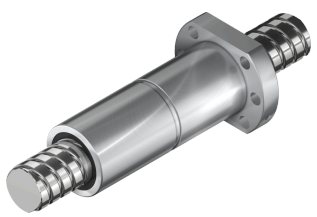

thread direction:	R
nominal diameter:	80 mm
lead:	20 mm
Ball return:	K - Cassette return
Number of circulations:	4
Nut design:	DDB-N
Free length:	3,259 mm
shaft length:	3,464 mm
Pitch deviation to 300mm:	0.023 mm

Technical data	
Dynamic load rating C [N]	144,300
Static load rating C_0 [N]	349,900
Axial backlash [mm]	0
Preload [%]	7
Nut length [mm]	259
Speed characteristic DN at n_{max}	90,000
Mass of nut [kg]	14

Data from application			
	Calculated value	Permissible value	Workload
Load ratio C_{dyn}/F_{bm}	13.65	5	37%
Average operating load F_{bm} [N]	10,573		
Service life [km]	14,000		
Load factor f_w	1.3		
Short-stroke factor f_s	1		
Service life [a]	>10	15	34%
Static structural safety s_0	32.94	3	9%
Maximum operating load F_{bmax} [N]	10,621		
Maximum load F_{max} [N]	973	264,282	0%
Critical axial force F_k [N]	528,565		
Max. permissible axial force F_{kzul} [N]	264,282		
Max. Speed n_{max} [1/min]	900	1,024	88%
Crit. Speed n_k [1/min]	1,279		
Max. permissible speed $n_{permissible}$ [1/min]	1,024		
Speed from DN value n_{DN} [1/min]	1,125		
Permissible speed from DN value $n_{DN,perm}$ [1/min]	1,125		
Max. speed [m/s]	0.3	0.34	88%
Max. perm. acceleration [m/s²]	1	15	7%

General notes

The calculation results are based on the technical information you have entered; we have assumed values for missing information

Please note that the calculated service life is a theoretical value.

The service life calculation is based on the assumption of an ideally rigid adjacent construction and assumes that all specifications in our assembly instructions for ballscrews are adhered to (in particular the lubrication specifications).

In addition, the effects of vibrations, shocks, dirt or temperature fluctuations can only be introduced into the service life calculation by artificially increasing the equivalent load.